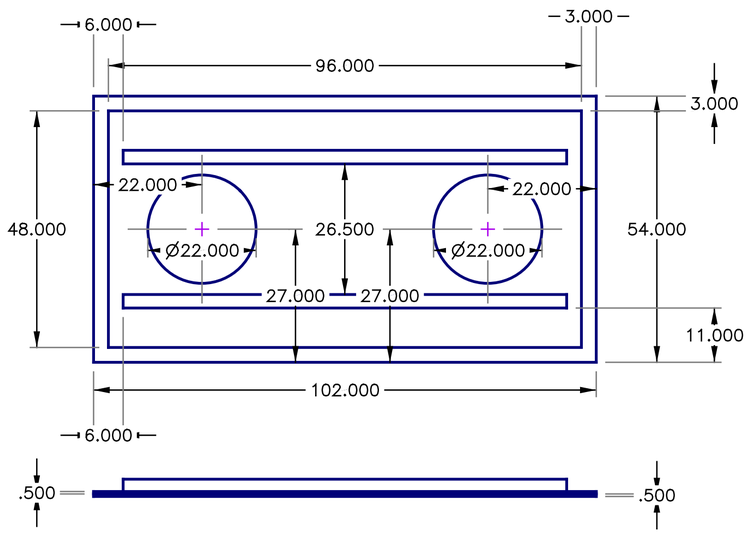

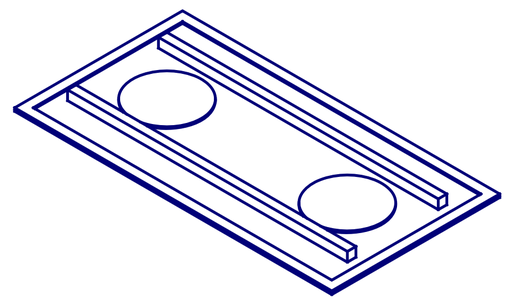

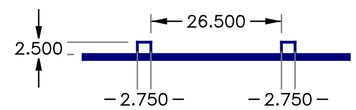

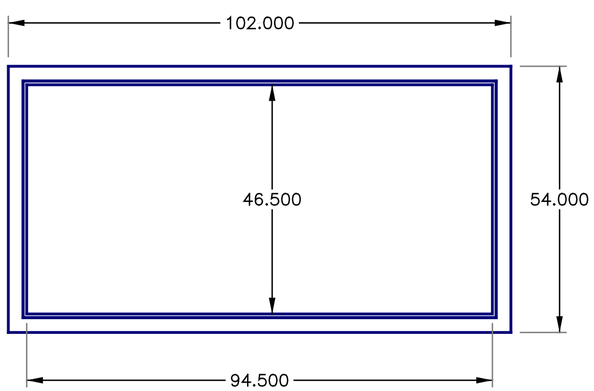

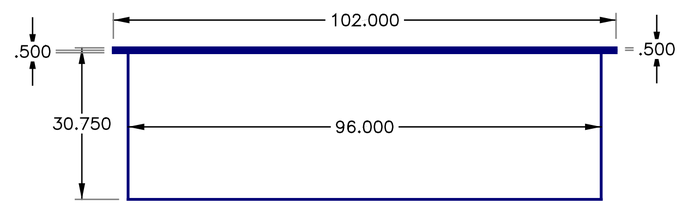

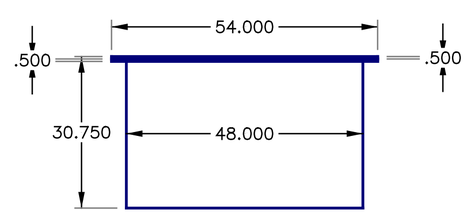

REV	DESCRIPTION	BY	DATE

TITLE

	SCALE	DATE
	DRAWN BY	
	CHECKED BY	
	APPROVED BY	

PROJECT NUMBER

DRAWING NUMBER

DRAWING SHEET – A3, LANDSCAPE